MR-LDR-32-M27

Third Angle Projection Units: mm

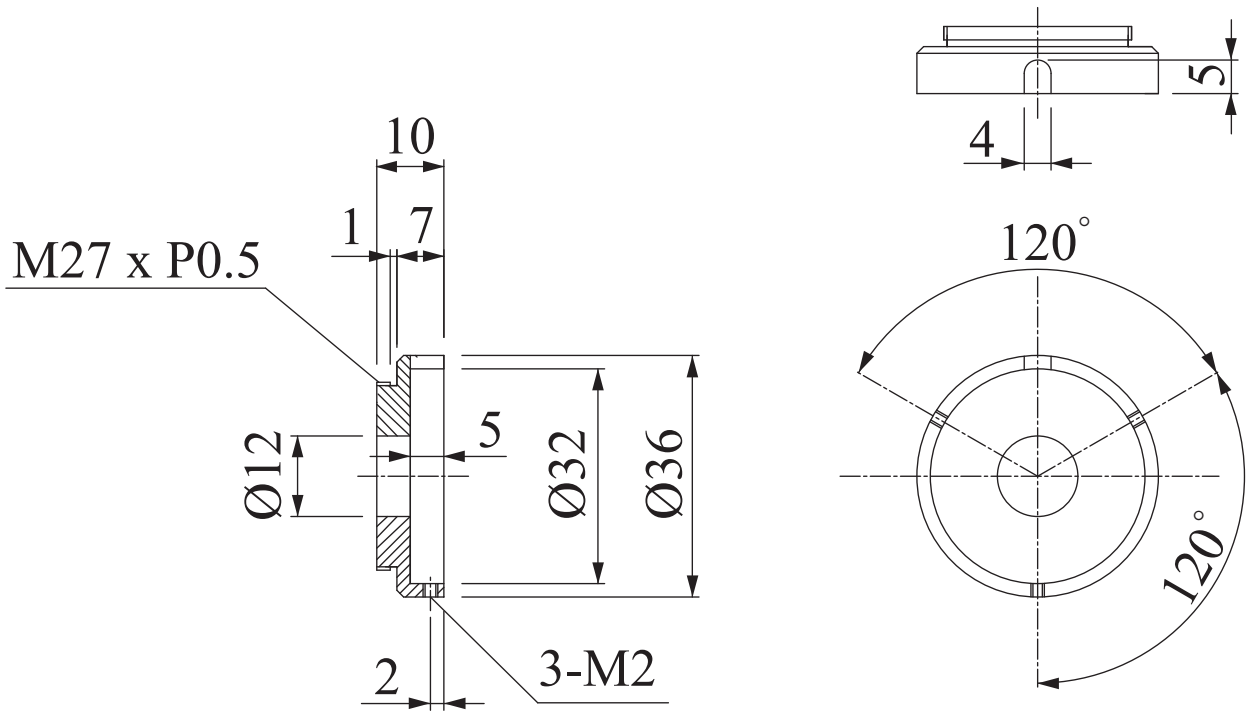

CCS Inc.